PakGent

Technical Datasheet

Article - No:	TDS-SMB125G	Revision: A0
Remarks	single use only	

	Specification
Product name	SMB125G,125ml,Square Media Bottle
Production conditions	Class 100,000 clean room production
	No release agent is used
Classification	CE/IVD
Dimensions	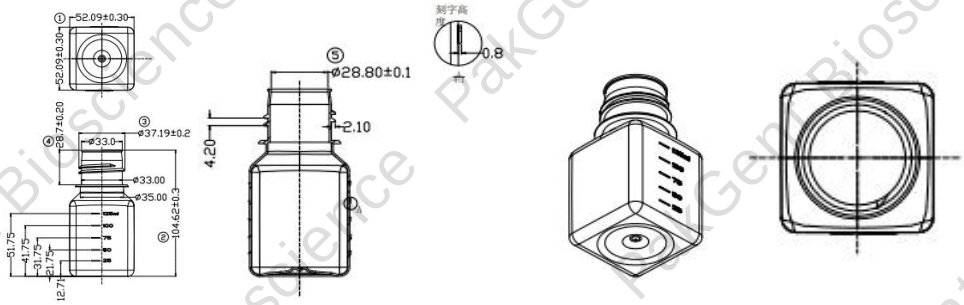
Colour	Clear
Nominal Capacity	125ml
Material Characteristics	bottle:Polyethylene Terephthalate Glycol(PETG)
	cap:High Density Polyethylene(HDPE)
Sterile	Yes
Product Characteristics	biologically inert
	no heavy metals according to EC/94/62
Purity Grade	free of RNase and DNase
	free of pyrogen
	free of PCR inhibitors
	free of human DNA
	free of endotoxins
	free of ATP
Shelf - Life	60 months at controlled storage conditions
Packaging	pcs per case: 96
Storage	Storage Temperature:20°C-25°C,humidity40%-60%
	Keep clean,ventilated and out of direct sunlight
Approved by PakGent quality department	

PakGent Bioscience